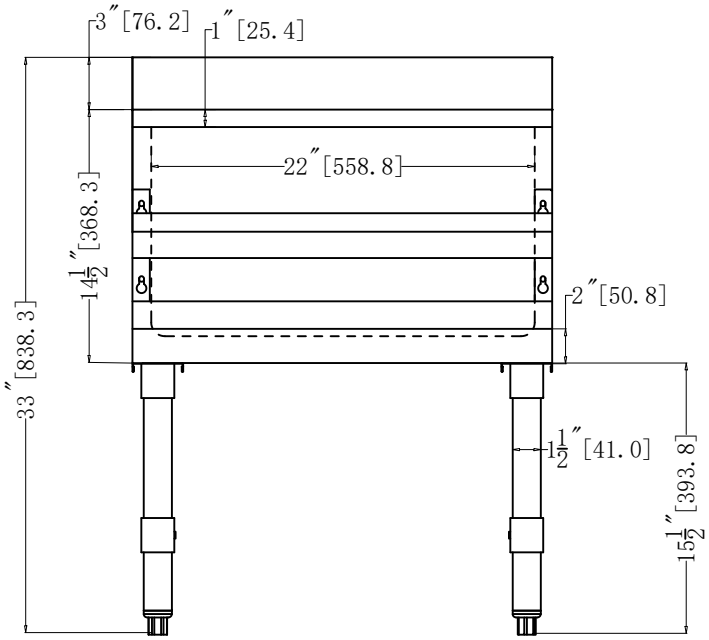
3″[76.2]
1″[25.4]
22″[558.8]
14½″[368.3]
2″[50.8]
33″[838.3]
1½″[41.0]
15½″[393.8]

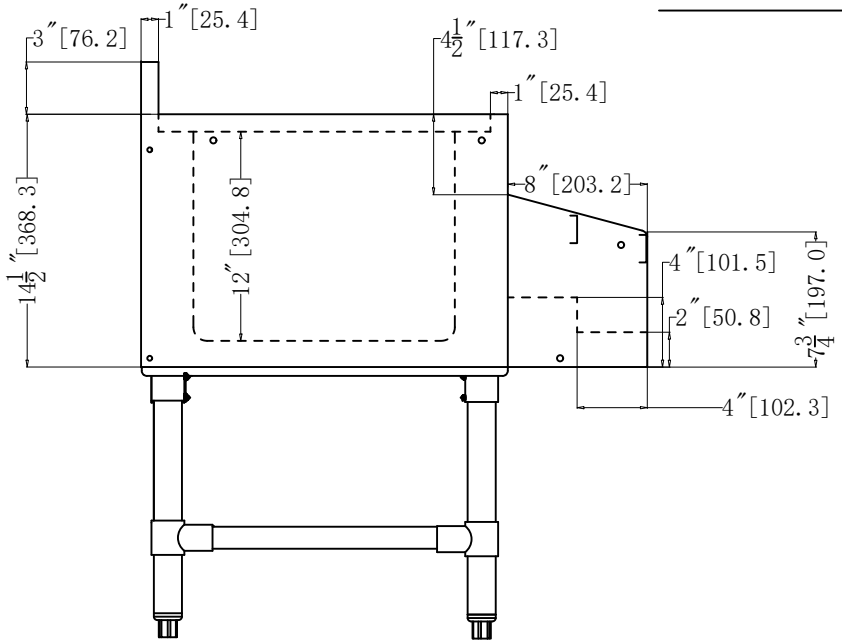
3″[76.2]
1″[25.4]
4½″[117.3]
1″[25.4]
8″[203.2]
14½″[368.3]
12″[304.8]
4″[101.5]
2″[50.8]
7¾″[197.0]
4″[102.3]

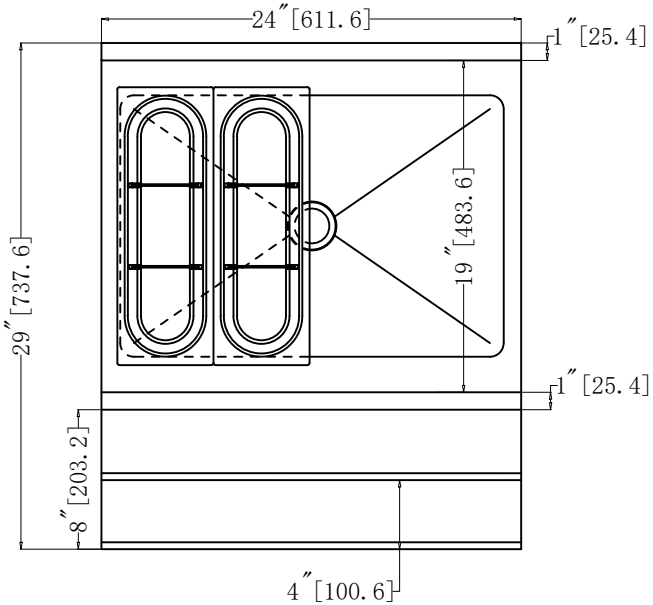
24″[611.6]
1″[25.4]
29″[737.6]
19″[483.6]
1″[25.4]
8″[203.2]
4″[100.6]

ITEM: 47519